THE INFORMATION CONTAINED IN THIS DOCUMENT IS THE PROPERTY OF DMIPL AND IT SHALL NOT BE USED, REPRODUCED OR DISCLOSED TO OTHERS IN WHOLE OR IN PART WITHOUT THE EXPRESS PERMISSION OF DMIPL

ANY MANUAL ALTERATION WITHOUT AUTHORISED SIGNATURE SHALL AUTOMATICALLY RENDER THIS DRAWING INVALID

DEVIATION ON UNTOLERANCED DIMENSIONS IS:2102

DIMENSION									
OVER	0.5	3	6	30	120	400	1000	2000
UP TO & INCL.	3	6	30	120	400	1000	2000	4000
MACHINE TOLERANCE	±0.1	±0.1	±0.2	±0.3	±0.5	±0.8	±1.2	±2
FABRICATION TOLERANCE	±0.2	±0.3	±0.5	±0.8	±1.2	±2	±3	±4

SURFACE FINISH SYMBOLS

ROUGHNESS SYMBOL	CYL.GRINDING	SUR.GRINDING	MACHINING		ROUGH MACHINING
	CG	SG	M		RM
ROUGHNESS VALUES Ra µm	0.8	0.8	3.2	6.3	25

ISSUE	DESCRIPTION	DATE	SIG
R1	Flange outer and CRS dimension changed	28.06.10	A.S
R2	Casing Centre Height 266 was 203,casing Material SS304 was CRCA	30.06.10	A.S
R3	Flange outer dimension 315 was 310,225 was 220	16.08.10	A.S
R4	3700 m³/Hr was 3300m³/Hr ,180mmwc was 200mmwc	23.05.11	A.S

Material of construction:
1) Casing -SS304 (R2)
2) Impeller -SS304

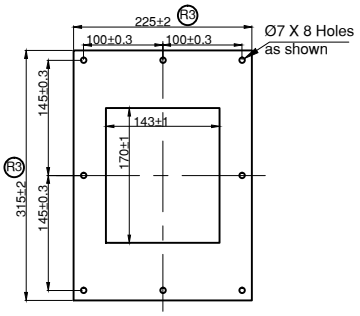

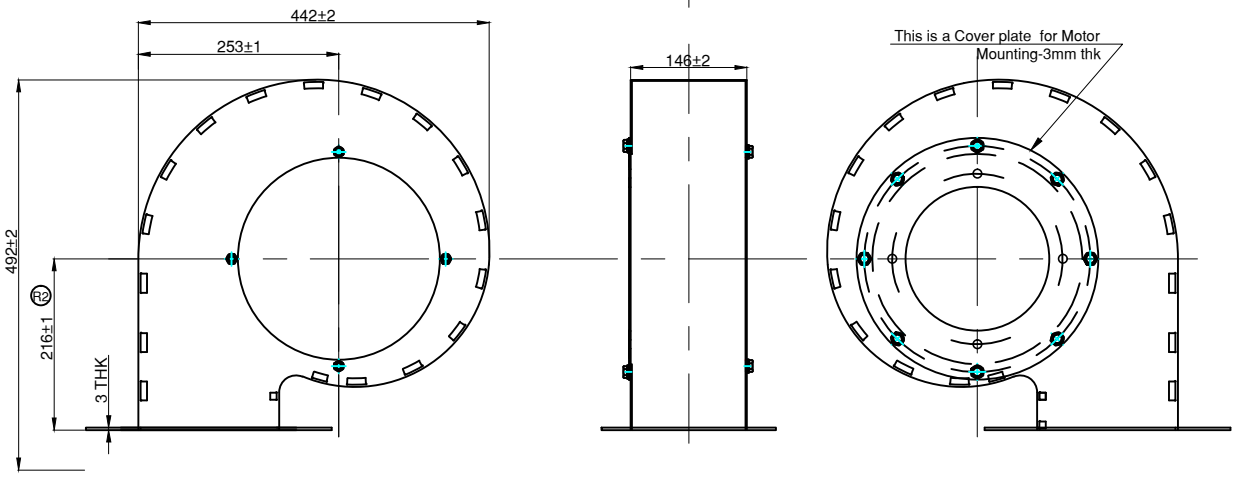

Model	Maximum Air Vol m³/Hr ±10%	Maximum Working Pressure pascal	Recommended Motor Output Kw/Hp	Speed RPM	Noise Level db A
CB250T2-01 R	3700(2150 Cfm) (R4)	1760(180mmwc) (R4)	3.7/ 5	2800	80

The above Data is Tentative , Subject to confirmation after testing of Prototype.

* Vibration Limited to 2.8mm/sec rms,as per ISOStandard14694-2003,Table4,BV3,Measured at Motor Bearing

The Impeller is Balanced to Grade 6.3 -ISO 1940
Casing is cleated type and is not of welded type

Note:
*Air Output And Pressure data are provided for Reference Only
*Air output - Conversion to cfm: multiply "m /hr"by 0.59
*Static Pressure - Conversion to pascal: multiply "mmwc" by 9.81

Motor:
* The Supply of Motor is not in our scope of supply
* Design is suitable for motors with the following Specification
1) Frame Size -100L
2)Flange and Foot Mounted
3) Flange Fixing PCD 215 x Dia 15 x 4Holes

DIM IN ( ) IS FOR REFERENCE ONLY | DEVATION ON UNTOLERANCED DIMENSION ARE TO BE AS PER IS:2101-MEDIUM CLASS

ALL DIMENSIONS ARE IN MM | FILE NAME : Specification CB250T2-01- R.dwg | SCALE - NTS | FIRST ANGLE PROJ

DESIGNED BY | CHECKED BY A.S | APPROVED BY A.S | DATE: | ISSUED DATE

Dynamic Motors (India) Pvt. Ltd.
CHENNAI - 600 058, INDIA
www.dynamicmotorsindia.com
research@dynamicmotorsindia.com

SPECIFICATION CB250T2-01- R

DRG NO - CB250-202 | REVISION R4 | SHEET 1 of 1